User Manual

020-001438-01

Christie DHD410S

CHRISTIE®

NOTICES

COPYRIGHT AND TRADEMARKS

Copyright ©2018 Christie Digital Systems USA Inc. All rights reserved.

All brand names and product names are trademarks, registered trademarks or trade names of their respective holders.

GENERAL

Every effort has been made to ensure accuracy, however in some cases changes in the products or availability could occur which may not be reflected in this document. Christie reserves the right to make changes to specifications at any time without notice. Performance specifications are typical, but may vary depending on conditions beyond Christie's control such as maintenance of the product in proper working conditions. Performance specifications are based on information available at the time of printing. Christie makes no warranty of any kind with regard to this material, including, but not limited to, implied warranties of fitness for a particular purpose. Christie will not be liable for errors contained herein or for incidental or consequential damages in connection with the performance or use of this material. Canadian manufacturing facility is ISO 9001 and 14001 certified.

WARRANTY

Products are warranted under Christie's standard limited warranty, the complete details of which are available by contacting your Christie dealer or Christie. In addition to the other limitations that may be specified in Christie's standard limited warranty and, to the extent relevant or applicable to your product, the warranty does not cover:

a. **Problems or damage occurring during shipment, in either direction.**
b. **Problems or damage caused by combination of a product with non-Christie equipment, such as distribution systems, cameras, DVD players, etc., or use of a product with any non-Christie interface device.**
c. **Problems or damage caused by misuse, improper power source, accident, fire, flood, lightening, earthquake or other natural disaster.**
d. **Problems or damage caused by improper installation/alignment, or by equipment modification, if by other than Christie service personnel or a Christie authorized repair service provider.**
e. **Problems or damage caused by use of a product on a motion platform or other movable device where such product has not been designed, modified or approved by Christie for such use.**
f. **Except where the product is designed for outdoor use, problems or damage caused by use of the product outdoors unless such product is protected from precipitation or other adverse weather or environmental conditions and the ambient temperature is within the recommended ambient temperature set forth in the specifications for such product.**
g. **Defects caused by normal wear and tear or otherwise due to normal aging of a product.**

The warranty does not apply to any product where the serial number has been removed or obliterated. The warranty also does not apply to any product sold by a reseller to an end user outside of the country where the reseller is located unless (i) Christie has an office in the country where the end user is located or (ii) the required international warranty fee has been paid.

The warranty does not obligate Christie to provide any on site warranty service at the product site location.

PREVENTATIVE MAINTENANCE

Preventative maintenance is an important part of the continued and proper operation of your product. Failure to perform maintenance as required, and in accordance with the maintenance schedule specified by Christie, will void the warranty.

REGULATORY

The product has been tested and found to comply with the limits for a Class A digital device, pursuant to Part 15 of the FCC Rules. These limits are designed to provide reasonable protection against harmful interference when the product is operated in a commercial environment. The product generates, uses, and can radiate radio frequency energy and, if not installed and used in accordance with the instruction manual, may cause harmful interference to radio communications. Operation of the product in a residential area is likely to cause harmful interference in which case the user will be required to correct the interference at the user's own expense.

CAN ICES-3 (A) / NMB-3 (A)

이 기기는 업무용 **(A** 급 **)** 으로 전자파적합등록을 한 기기이오니 판매자 또는 사용자는 이점을 주의하시기 바라며 **,** 가정 외의 지역에서 사용하는 것을 목적으로 합니다 **.**

Environmental

The product is designed and manufactured with high-quality materials and components that can be recycled and reused. **This symbol** ☒ means that electrical and electronic equipment, at their end-of-life, should be disposed of separately from regular waste. Please dispose of the product appropriately and according to local regulations. In the European Union, there are separate collection systems for used electrical and electronic products. Please help us to conserve the environment we live in!

Content

Safety 5

Site requirements 5

Physical operating environment 6

Class A emissions limits 6

Laser safety warnings 6

Introduction 7

Main unit 7

Output connections 8

Control panel 9

Remote control 11

Installation 13

Connect to computer/notebook 13

Connect to video sources 14

Powering the projector on/off 14

Powering on the projector 14

Powering off the projector 15

Warning Indicator 16

Adjusting the projected image 16

Adjusting the projector's height 16

Adjusting the projector's focus 16

Adjusting projection image size (diagonal) 18

User Controls 19

On-screen display menus 19

How to operate 19

Image 20

Configuration 22

Settings 23

Audio 24

Options 25

Options > Laser Settings 26

3D 27

Interactive 28

LAN . . . 29
How to use web browser to control your projector . . . 30
When making a direct connection from your computer to the projector . . . 31
Crestron RoomView Control tool . . . 32

Multimedia . . . 33

Accessing multimedia files . . . 33
How to access Multimedia mode . . . 33
Mobile display . . . 33
Laptop display . . . 34
Desktop display . . . 34
USB storage display . . . 35
Configuring multimedia settings . . . 35

Appendices . . . 36

Installing and cleaning the optional dust filter . . . 36
Air filter cleaning procedure . . . 36
Compatibility modes . . . 38
VGA Analog . . . 38
HDMI digital . . . 40
RS232 commands and protocol function list . . . 42
RS232 port setting . . . 42
RS232 signals connection . . . 42
Commands set list . . . 42
Optional accessories . . . 45
Regulation and safety notices . . . 45
FCC notice . . . 45
Notice: Shielded cables . . . 46
Caution . . . 46
Operation conditions . . . 46
Notice: Canadian users . . . 46
Remarque à l'intention des utilisateurs canadiens . . . 46
Declaration of Conformity for EU countries . . . 46
Disposal instructions . . . 47
Ceiling mount installation . . . 47

Safety

Read through this document in its entirety and understand all warnings and precautions before attempting to operate the projector.

Warning! Failure to comply with the following could result in death or serious injury.

- Please carefully review and follow the installation instruction included in this manual.
- Do not look into the projector lens when the laser is on. The bright light may result in permanent eye damage.
- To reduce the risk of fire or electric shock, do not expose this projector to rain or moisture.
- Do not open or disassemble the projector as this may cause electric shock.
- All installations must be performed by Christie qualified authorized trained installers.
- Keep all combustible material away from the concentrated light beam of the projector.
- Position all cables where they cannot contact hot surfaces or be pulled or tripped over.
- Always power down the projector and disconnect all power sources before servicing or cleaning.
- Use a soft cloth moistened with a mild detergent to clean the display housing.
- Disconnect the power plug from the AC outlet if the product is not being used for an extended period of time.
- Only use the AC power cord supplied. Do not attempt operation if the AC supply and cord are not within the specified voltage and power range for your region.
- Do not block the ventilation slots and openings on the projector.
- Do not use abrasive cleaners, waxes, or solvents to clean the projector.
- Do not allow anything to rest on the power cord.
- Not for household use.
- No direct exposure to beam shall be permitted.
- While in portrait orientation, use a plate beneath the projector to meet safety requirements.

Site requirements

Do not use the projector under the following conditions:

- In extremely hot, cold, or humid environments.
- In areas susceptible to excessive dust and dirt.
- Near any product generating a strong magnetic field.
- In direct sunlight.

Physical operating environment

Provides specifications for the operating environment.

Operating temperature range	0 to 2500 ft: to 5 to 40°C (41 to 104°F) 2500 to 5000 ft: 5 to 35°C (41 to 95°F) 5000 to 10,000 ft: 5 to 30°C (41 to 86°F)
Operating altitude	10,000 ft maximum
Humidity (non-condensing)	10 to 85% RH

Class A emissions limits

This Class A digital apparatus meets all requirements of the Canadian Interference - Causing Equipment Regulations.

Laser safety warnings

This projector is a Class 2 laser device that conforms with IEC 60825-1:2007 and CFR 1040.10 and 1040.11.

Warning! Failure to comply with the following could result in death or serious injury.

- No direct exposure to beam shall be permitted.
- This projector has a built-in Class 4 laser module. Never attempt to disassemble or modify the projector.
- Any operation or adjustment not specifically instructed in the User manual creates the risk of hazardous laser radiation exposure.
- Do not open or disassemble the projector as this may cause damage from exposure of laser radiation.
- PERMANENT/TEMPORARY BLINDNESS HAZARD! No direct exposure to the beam must be permitted.
- Follow the control, adjustment, or operation procedures to avoid damage or injury from exposure of laser radiation.
- The instructions for the assembly, operation, and maintenance include clear warnings concerning precautions to avoid possible exposure to hazardous laser radiation.

Introduction

Main unit

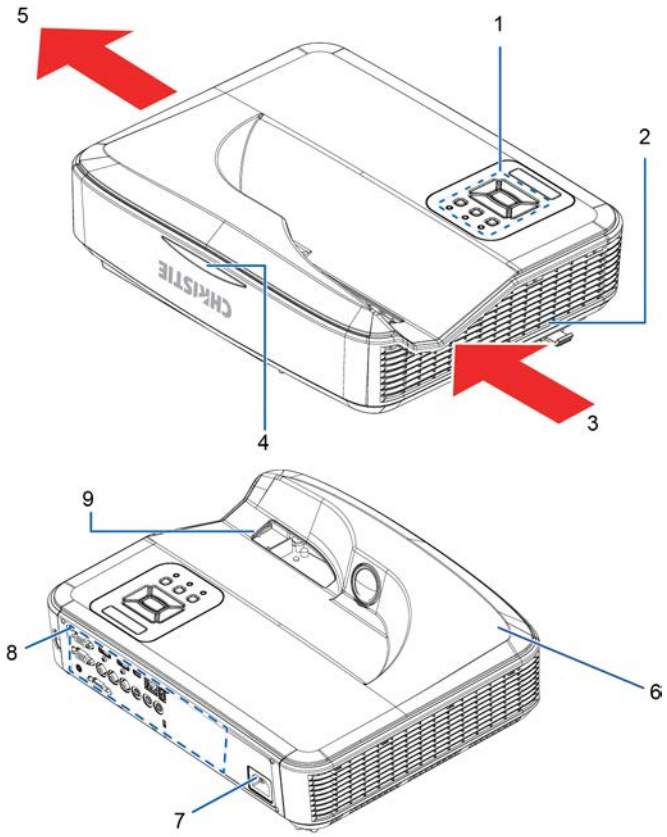

Ind.	Part name	Ind.	Part name
1	Control Panel	6	Speaker
2	Focus switch	7	Power Socket
3	Ventilation (inlet)	8	Input/Output Connections
4	IR Receiver	9	Lens
5	Ventilation (outlet)		

The interface is subject to model's specifications.

Output connections

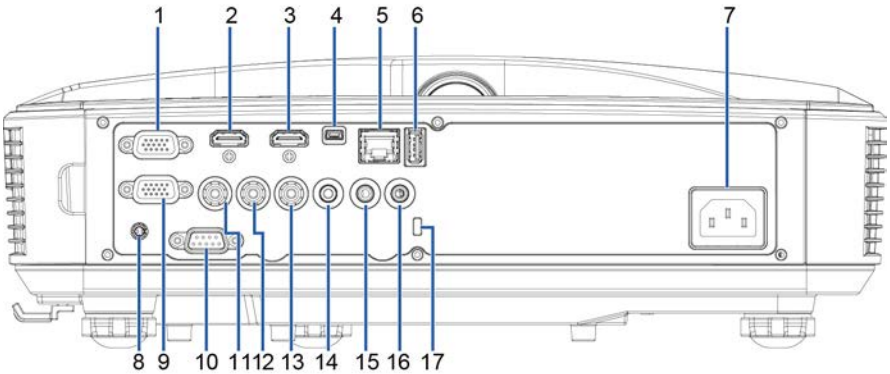

Ind.	Connector name	Ind.	Connector name
1	VGA1-In/YPbPr Connector (PC Analog Signal/Component Video INput/ HDTV/YPbPr)	10	RS-232 Connector (9-pin DCE type)
2	HDMI2 Input Connector	11	Composite Video Input Connector
3	HDMI1 Input Connector	12	Composite Audio Input (right) Connector
4	USB Connector (Connect PC for firmware upgrade or interactive)	13	Composite Audio Input (left) Connector
5	RJ45 connector	14	Audio Output Connector (3.5mm mini jack)
6	USB Type A Connector	15	Audio Input Connector (3.5mm mini jack)
7	Power Socket	16	Audio Input Connector (microphone)
8	Interactive Connector (3.5 mm mini jack)	17	KensingtonTM Lock Port
9	VGA-Out/VGA2-In Connector		

Monitor loop through only support in VGA1-In/YPbPr.

Control panel

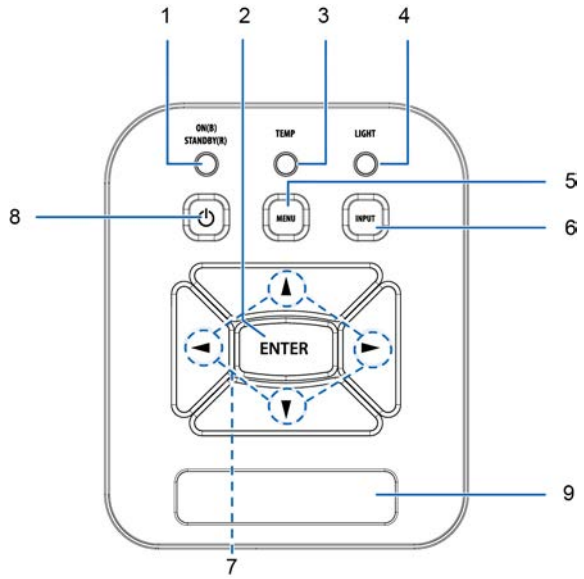

Using the control panel		
1	Power	See *Powering the projector on/off* on page 14.

Using the control panel		
2	Enter	Press **Enter** to confirm your item selection.
3	Temp LED	Refer to the LED indicator of the projector temperature status.
4	Light LED	Refer to the LED indicator of the projector light source status.
5	Menu	Press **MENU** to launch the on-screen display (OSD) menu. To exit OSD, press **MENU** again.
6	Input	Press **INPUT** to select an input signal.
7	Four Directional Select Keys	Use to select items or make adjustments to your selection.
8	ON/Standby LED	Refer to the LED indicator of the projector power status.
9	IR Receiver	—

Remote control

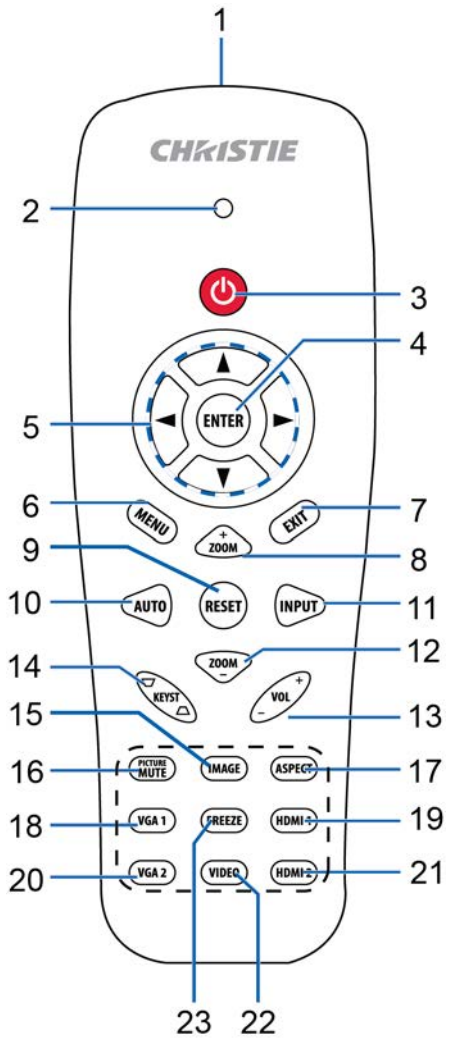

Using the Remote Control		
1	Infrared transmitter	Sends signals to the projector.
2	LED	LED Indicator.
3	Power	See *Powering the projector on/off* on page 14.
4	Enter	Confirm your item selection.
5	Four Directional	Use **Up**, **Down**, **Left**, **Right** arrows to select items or make adjustments to your
6	Menu	Press **Menu** to launch the on-screen display (OSD) menu. To exit OSD, press **Menu** again.
7	Exit	Press **Exit** to close the OSD menu.

8	Zoom in	Zoom in the projector display.
9	Reset	Return the adjustments and settings to the factory default values (except for light counter).
10	Auto	Automatically synchronizes the projector to the input source.
11	Input	Press **Input** to select an input signal.
12	Zoom out	Zoom out the projector display.
13	Volume +/-	Adjust to increase/decrease the volume.
14	Keystone +/-	Adjust image distortion caused by tilting the projector.
15	Image	Select the display mode from Bright, PC, Movie, Game, and User.
16	Picture Mute	Momentarily turns off/on the audio and video
17	Aspect ratio	Use this function to choose your re-quired aspect ratio.
18	VGA1	Press **VGA1** to choose VGA IN 1 connector.
19	HDMI1	Press **HDMI1** to choose HDMI IN 1 connector.
20	VGA2	Press **VGA2** to choose VGA IN 2 connector.
21	HDMI2	Press **HDMI2** to choose HDMI IN 2 connector.
22	Video	Press **Video** to choose Composite video source.
23	Screen freeze	Pause the screen image. Press again to resume the screen image.

Installation

Connect to computer/notebook

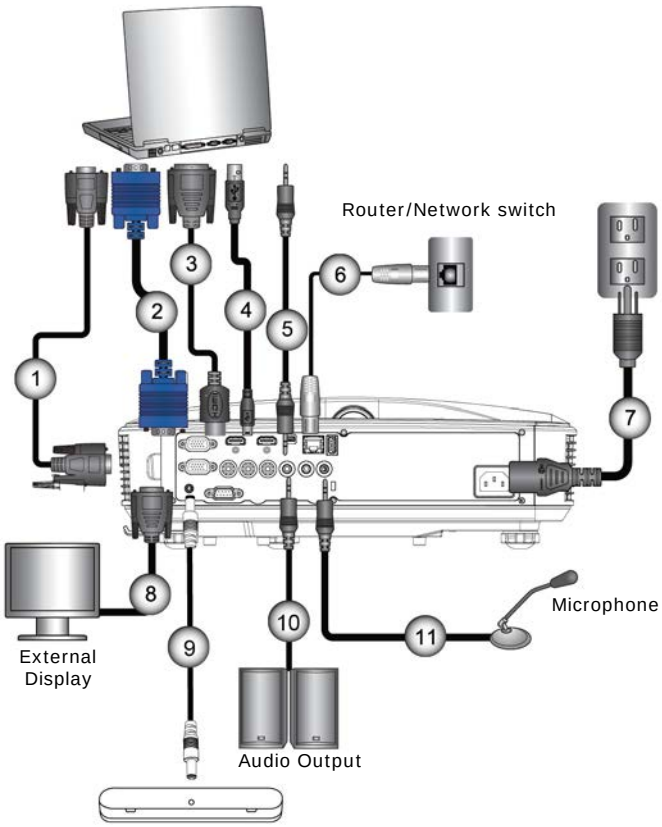

Ind.	Connector name	Ind.	Connector name
1	RS232 Cable	7	Power Cord
2	VGA Cable	8	VGA Output Cable
3	HDMI Cable	9	DC to DC Cable
4	USB Cable	10	Audio Output Cable
5	Audio Cable/RCA	11	Audio Input Cable
6	RJ45 Cable		

Connect to video sources

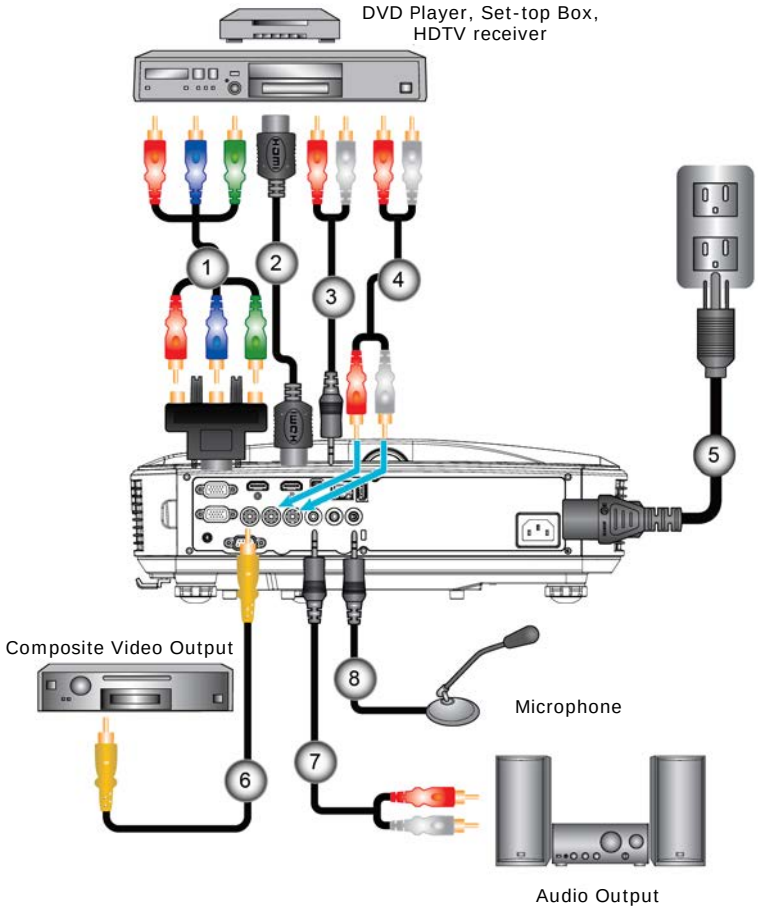

Ind.	Connector name	Ind.	Connector name
1	15-Pin to 3 RCA Component/HDTV Adaptor	5	Power Cord
2	HDMI Cable	6	Composite Video Cable
3	Audio Cable	7	Audio Cable/RCA
4	Audio Cable/RCA	8	Audio Input Cable

Powering the projector on/off

Powering on the projector

1. Securely connect the power cord and signal cable.

   When connected, the POWER/STANDBY LED turns orange.

2. Turn on the projector by pressing ⏻ button either on the projector or on the remote.

At this moment, the POWER/STANDBY LED turns blue (1). The startup screen will display in approximately 5 seconds.

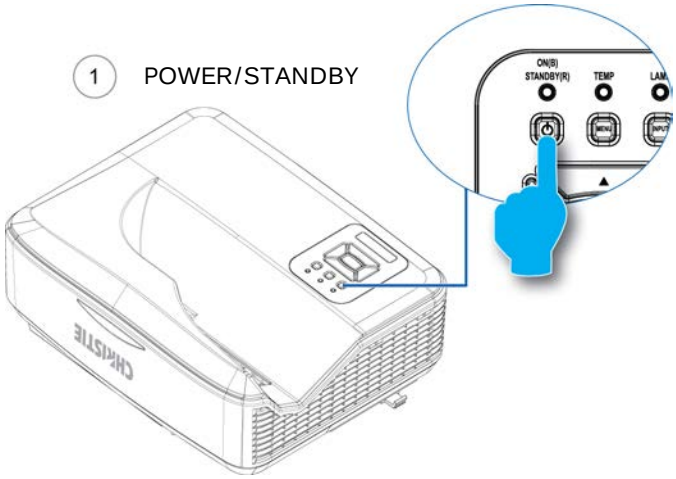

3. The first time you use the projector, you will be asked to select the preferred language and power saving mode.
4. Turn on and connect the source that you want to display on the screen (computer, notebook, video player, etc.). The projector detects the source automatically. If not, push menu button and go to **OPTIONS**.

   Make sure that the Source Lock has been set to **Off**.

   - If you connect multiple sources at the same time, press the **INPUT** button on the control panel or direct source keys on the remote control to switch between inputs.
   - When the power mode is in standby mode (power consumption < 0.5W), the VGA output/input and audio are deactivated when the projector is in standby.

Powering off the projector

1. Press the ⏻ button on the remote control or on the control panel to turn off the projector.

   The following message will be displayed on the screen.

   `Press power key again to confirm`

2. Press the ⏻ button again to confirm otherwise the message will disappear after 10 seconds. When you press the ⏻ button for the second time, the fan will start cooling the system and will shut down.

   The cooling fans continue to operate for about four seconds for cooling cycle and the POWER/STANDBY LED will flash orange.

   When the POWER/STANDBY LED lights solid orange, the projector has entered standby mode.

   If you want to turn the projector back on, you must wait until the projector has completed the cooling cycle and has entered standby mode. Once in standby mode, press ⏻ button to restart the projector.

3. Disconnect the power cord from the electrical outlet and the projector.

Warning Indicator

When the warning indicators (see below) come on, the projector will automatically shutdown:

- LIGHT LED indicator is lit red and if POWER/STANDBY indicator flashes amber.
- TEMP LED indicator is lit red, this indicates the projector has overheated. Under normal conditions, the projector can be switched back on.
- TEMP LED indicator flashes red and if POWER/STANDBY indicator flashes amber.

  Unplug the power cord from the projector, wait for 30 seconds and try again. If the warning indicator light up again, contact your service center for assistance.

Adjusting the projected image

Adjusting the projector's height

The projector is equipped with elevator feet for adjusting the image height.

1. Locate the adjustable foot you want to modify on the underside of the projector.
2. Rotate the adjustable ring clockwise to raise the projector or counter clockwise to lower it.
3. Repeat with the remaining feet as needed.

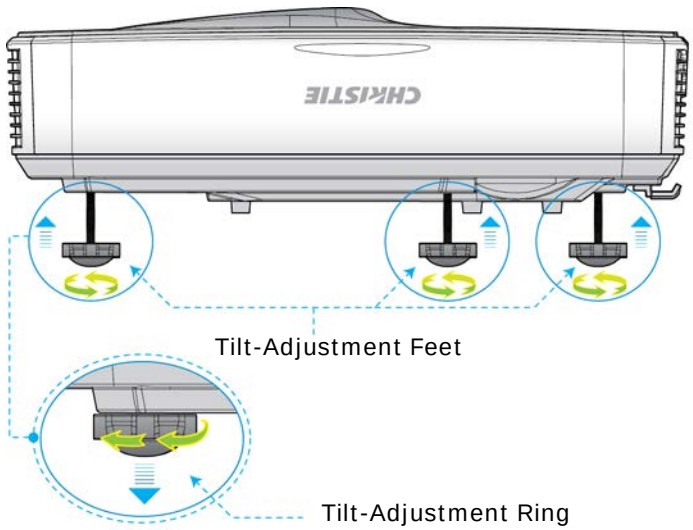

Adjusting the projector's focus

1. To focus the image, slide the focus switch to left/right until the image is clear.

1080p series: The projector will focus at distances from 1.443 to 1.887 feet (0.437 to 0.572 meters).

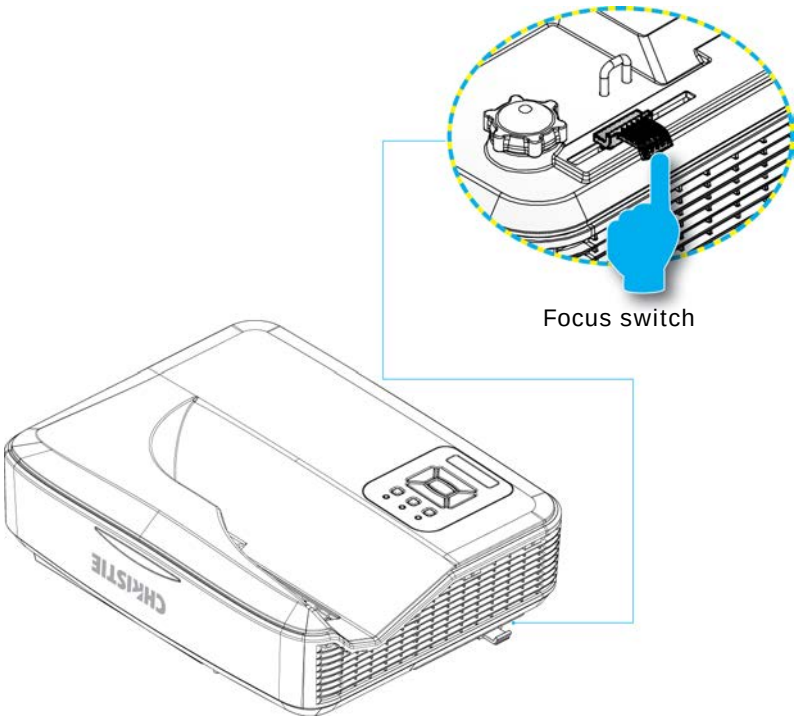

Adjusting projection image size (diagonal)

1080p series: Projection Image Size from 80” to 100” (2.03 to 2.54 meters).

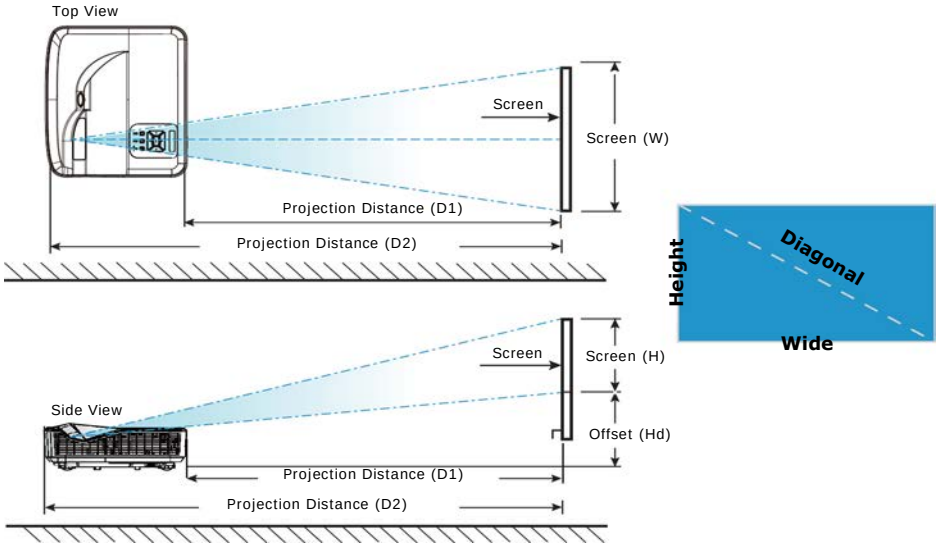

Diagonal length (inch) size of 16:9	Screen size WxH				Projection distance (D1)		Projection distance (D2)		Offset (HD)	
	(cm)		(inch)		(cm)		(inch)			
	Width	Height	Width	Height	Wide	Wide	Wide	Wide	(cm)	(inch)
87	192.6	108.3	75.8	42.6	23.3	9.2	54.3	21.4	28.9	11.4
90	199.2	112.1	78.4	44.1	24.9	9.8	55.9	22.0	29.6	11.7
95	210.3	118.3	82.8	46.6	27.7	10.9	58.7	23.1	30.9	12.2
100	221.4	124.5	87.2	49.0	30.5	12.0	61.5	24.2	32.2	12.7
102	225.8	127.0	88.9	50.0	31.6	12.4	62.6	24.6	32.7	12.9

User Controls

On-screen display menus

The Projector has multilingual on-screen display menus that you can use to make image adjustments and change a variety of settings.

How to operate

1. To open the OSD menu, press **Menu** on the Remote Control or Projector Keypad.
2. When OSD is displayed, use the Up and Down arrows to select any item in the main menu.

   While making a selection on a particular page, press the Right arrow or **Enter** key to enter sub menu.
3. Use the Up and Down arrows to select the desired item and adjust the settings using the Left and Right arrows.
4. Select the next item to be adjusted in the sub menu and adjust as described above.
5. Press **Enter** to confirm, and the screen will return to the main menu.
6. To exit, press **Menu** again.

   The OSD menu will close and the projector will automatically save the new settings.

Image

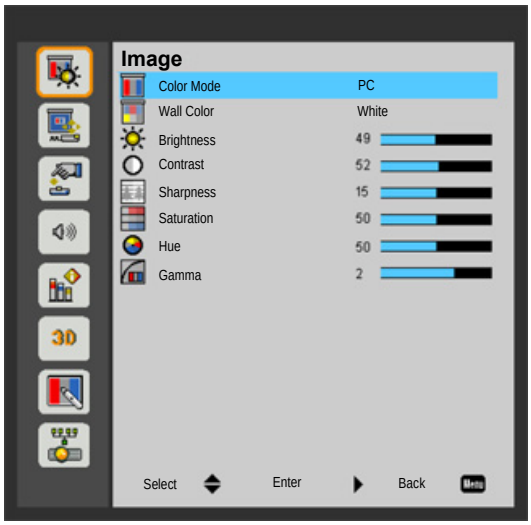

Option	Description
Color Mode	There are many factory presets optimized for various types of images. Use the ◀ or ▶ button to select the item. • Bright: For brightness optimization. • PC: For meeting presentation. • Movie: For playing video content. • Game: For game content. • User: Memorize user's settings.
Wall Color	Use this function to obtain an optimized screen image according to the wall color. You can select from White, Light Yellow, Light Blue, Pink, and Dark Green.
Brightness	Adjust the brightness of the image. • Press the **Left** arrow to darken image. • Press the **Right** arrow to brighten image.
Contrast	The Contrast controls the difference between the lightest and darkest parts of the picture. Adjusting the contrast changes the amount of black and white in the image. • Press the **Left** arrow to decrease the contrast. • Press the **Right** arrow to increase the contrast.
Sharpness	Adjust the sharpness of the image. • Press the **Left** arrow to decrease the sharpness. • Press the **Right** arrow to increase the sharpness.
Saturation	Adjust a video image from black and white to fully saturated color. • Press the **Left** arrow to decrease the amount of saturation in the image. • Press the **Right** arrow to increase the amount of saturation in the image.
Hue	Adjust the color balance of red and green. • Press the **Left** arrow to increase the amount of green in the image. • Press the **Right** arrow to increase the amount of red in the image.

Option	Description
Gamma	This allows you to adjust the gamma value to obtain the better image contrast for the input. **Note:** Sharpness, Saturation and Hue functions are only supported under video mode.

Configuration

Option	Description
Aspect Ratio	• Auto: Keep the image with original width-height ratio and maximize the image to fit native horizontal or vertical pixels. • 4:3: The image will be scaled to fit the screen and displayed using a 4:3 ratio. • 16:9: The image will be scaled to fit the width of the screen and the height adjusted to display the image using a 16:9 ratio. • 16:10: The image will be scaled to fit the width of the screen and the height adjusted to display the image using a 16:10 ratio.
Phase	Synchronize the signal timing of the display with the graphic card. If the image appears unstable or flickers, use this function to correct it.
Clock	Adjust to achieve an optimal image when there is a vertical flicker in the image.
H. Position	• Press the **Left** arrow to move the image left. • Press the **Right** arrow to move the image right.
V. Position	• Press the **Left** arrow to move the image down. • Press the **Right** arrow to move the image up.
Digital Zoom	• Press the **Left** arrow to reduce the size of an image. • Press the **Right** arrow to magnify an image on the projection screen.
Geomentric Correction	Press the **Left** or **Right** arrow to adjust image distortion vertically. If the image looks trapezoidal, this option can help make the image rectangular.
Orientation	• Front: The image is projected straight on the screen. • Front Ceiling: This is the default selection. When selected, the image will turn upside down. • Rear: When selected, the image will appear reversed. • Rear Ceiling: When selected, the image will appear reversed in upside down position. **Note:** H. Position and V. Position ranges will depend on input source.

Settings

Option	Description
Language	Choose the multilingual OSD menu. Press the **Left** or **Right** arrow into the sub menu and then use the **Up** or **Down** arrow to select your preferred language. Press **Right** arrow on the remote control to finalize the selection.
OSD Position	Choose the menu location on the display screen.
Closed Caption	Use this function to enable close caption menu. Select an appropriate closed captions option: Off, CC1, CC2, CC3, and CC4.
VGA Output (Standby)	Choose **On** to enable VGA OUT connection.
LAN (Standby)	Choose **On** to enable LAN connection. Choose **Off** to disable LAN connection.
VGA-2 (Function)	• Input: Choose **Input** to let the VGA port works as a VGA input function. • Output: Choose **Output** to enable the VGA Out function once the projector is powered on.
Test Pattern	Display a test pattern.
Factory Reset	Choose **Yes** to return the parameters on all menus to the factory default settings.

Audio

Option	Description
Speaker	• Choose **On** to enable the speaker. • Choose **Off** to disable the speaker.
Line Out	• Choose **On** to enable the line out function. • Choose **Off** to disable the line out function.
Microphone	• Choose **On** to enable the microphone. • Choose **Off** to disable the microphone.
Mute	• Choose **On** to turn mute on. • Choose **Off** to turn mute off.
Volume	• Press the **Left** arrow to decrease the volume. • Press the **Right** arrow to increase the volume.
Microphone Volume	• Press the **Left** arrow to decrease the microphone volume. • Press the **Right** arrow to increase the microphone volume.

Options

Option	Description
Auto Source	• On: The projector will search for other signals if the current input signal is lost. • Off: The projector will only search current input connection.
Input	Press **Right** arrow to enable/disable input sources. The projector will not search for inputs that are not selected.
Auto Power Off (Min)	Sets the countdown timer interval. The countdown timer will start, when there is no signal being sent to the projector. The projector will automatically power off when the countdown has finished (in minutes).
Laser Settings	See *Options > Laser Settings* on page <$elempagenum
High Altitude	• On: The built-in fans run at high speed. Select this option when using the projector at altitudes above 2500 feet/762 meters or higher. • Off: The built-in fans automatically run at a variable speed according to the internal temperature.
Filter Alarm (Hour)	• Filter Alarm (Hour): Set the filter reminder time. • Cleaning Up Reminder: Select **Yes** to reset the dust filter hour counter after replacing or cleaning the dust filter.
Information	Display the projector information for model name, SNID, source, resolution, software version, and aspect ratio on the screen.

Options > Laser Settings

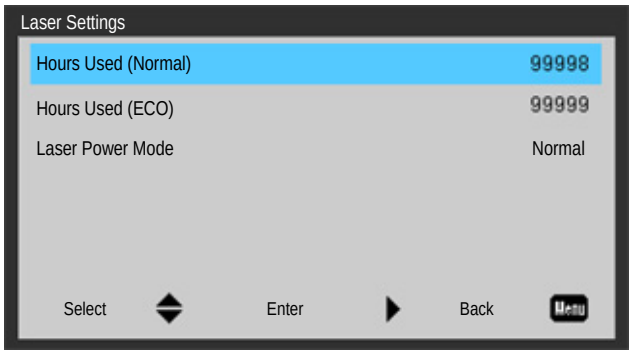

Option	Description
Hours Used (Normal)	Display the projection time of normal mode.
Hours Used (ECO)	Display the projection time of ECO mode.
Laser Power Mode	• Normal: Normal mode. • ECO: Use this function to dim the projector light which will lower power consumption and extend the light source life.

3D

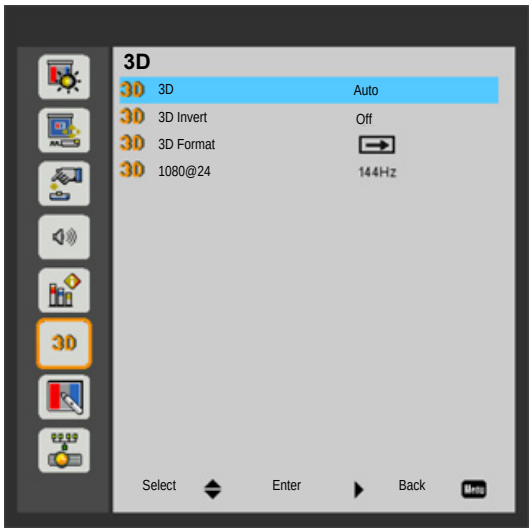

Option	Description
3D	Auto: When a HDMI 1.4a 3D timing identification signal is detected, the 3D image is selected automatically. Choose **On** to enable 3D function. Choose **Off** to disable 3D function.
3D Invert	If you see a discrete or overlapping image while wearing DLP 3D glasses, you may need to execute **Invert** to get best match of left/right image sequence to get the correct image.
3D Format	Use this feature to select the 3D format. Options are: Frame Packing, Side-by-Side (Half), Top and Bottom, Frame Sequential, and Field Sequential.
1080p@24	Use this feature to select 96 or 144Hz refresh rate as using 3D glasses in the1080p @ 24 frame packing.

- Frame Sequential is supported the DLP Link 3D input signals from VGA/HDMI connector.
- Frame Sequential/Field Sequential are supported the HQFS 3D input signals from Video connector.
- Frame Packing/Side by Side (Half)/Top and Bottom are supported from HDMI 1.4a 3D input signals

Interactive

Option	Description
Interactive Settings	• Choose **On** to enable Interactive function. • Choose **Off** to disable Interactive function. You must to unplug the Mini USB cable that connects NB/desktop with the projector before using the Interactive function. After you complete the Interactive Settings in OSD, use Mini USB cable to connect NB/desktop with the projector.

LAN

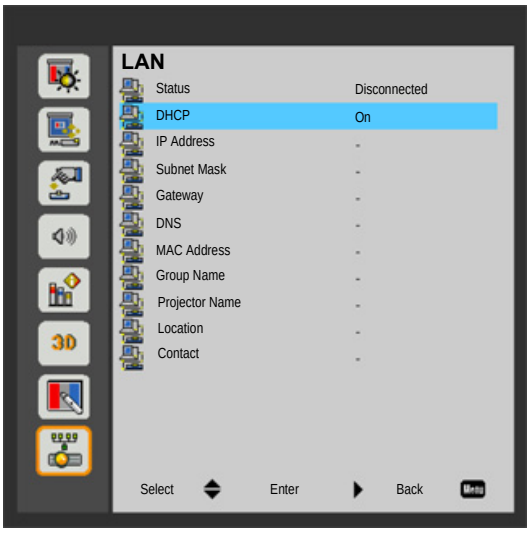

Option	Description
Status	Display the network connection status.
DHCP	Configure the DHCP settings. • On: Choose **On** to let the projector to obtain an IP address automatically from your network. • Off: Choose **Off** to assign IP, Subnet Mask, Gateway, and DNS configuration manually.
IP Address	Display an IP address.
Subnet Mask	Display the subnet mask number.
Gateway	Display the default gateway of the network connected to the projector.
DNS	Display the DNS number.
MAC Address	Display the MAC address.
Group Name	Display the group name.
Projector Name	Display the projector name.
Location	Display the projector location.
Contact	Display the contact information.

To set a manual IP address while DHCP off, use the WEB Management interface.

How to use web browser to control your projector

1. Turn on DHCP to allow a DHCP server to automatically assign an IP, or manually enter the required network information.
2. Choose apply and press **OK** button to complete the configuration process.
3. Open your web browser and type the IP Address from the OSD LAN screen.

   The web page will display as below.

When you used the projector IP address, you will can not link to your service server.

Based on network web-page for the input-string in [tools] tab, the limitation for Input-Length is in the below list (space and the other punctuation key included):

Category	Item	Input-length (characters)
Crestron Control	IP Address	15
	IP ID	2
	Port	5
Projector	Projector Name	10
	Location	9
	Assigned To	9

Category	Item	Input-length (characters)
Network Configuration	DHCP (Enabled)	(N/A)
	IP Address	15
	Subnet Mask	15
	Default Gateway	15
	DNS Server	15
User Password	Enabled	(N/A)
	New Password	15
	Confirm	15

When making a direct connection from your computer to the projector

1. Find an IP Address (10.0.21.200) from LAN function of projector.
2. Select **Apply** and press **Enter** button to submit function or press **menu** key to exit.
3. To open Network Connections, click **Start** > **Control Panel** > **Network and Internet Connections** > **Network Connections**.
4. Click the connection you want to configure, and then, under Network Tasks, click C**hange settings of this connection**.
5. On the General tab, under This connection uses the following items, click **Internet Protocol (TCP/IP)** > **Properties**.
6. Click **Use the following IP address**, and type as below:
   - IP address: 10.0.21.200
   - Subnet mask: 255.255.0.0
   - Default gateway:10.0.0.254
7. To open Internet Options, click IE web browser, click **Internet Options** > **Connections** > **LAN Settings...**

   The Local Area Network (LAN) Setting dialog appears.
8. In the Proxy Server area, cancel the **Use a proxy server for your LAN** checkbox, then click **OK** button twice.
9. Open Internet Explorer and type the IP address 10.0.21.200 in the address box.
10. Press **Enter**.

Crestron RoomView Control tool

Crestron RoomView™ provides a central monitoring station for 250+ control systems on a single Ethernet network (more are possible, the number depends on the combination of IP ID and IP address). Crestron RoomView monitors each projector, including projector's online status, system power, light source life, network setting and hardware faults, plus any custom attribute as defined by the Administrator. The Administrator can add, delete, or edit room information, contact information and events, which are logged automatically by the software for all users. (Operation UI as following image)

Crestron RoomView's function is set according to the products' models and specifications.

For further information, please visit:

http://www.crestron.com & www.crestron.com/getroomview

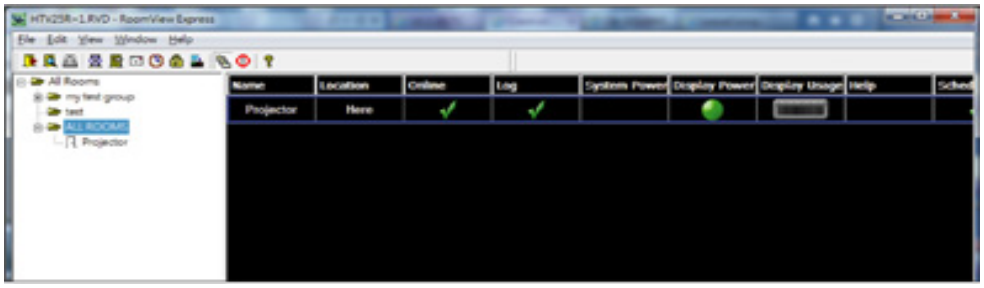

Multimedia

Accessing multimedia files

This projector supports projecting the media files (photos, videos, music, and documents) stored on a USB flash drive.

How to access Multimedia mode

1. Plug a USB flash drive into the USB connector at the back of the projector.
2. Press **INPUT** on the remote control or on the control panel to turn on the projector.

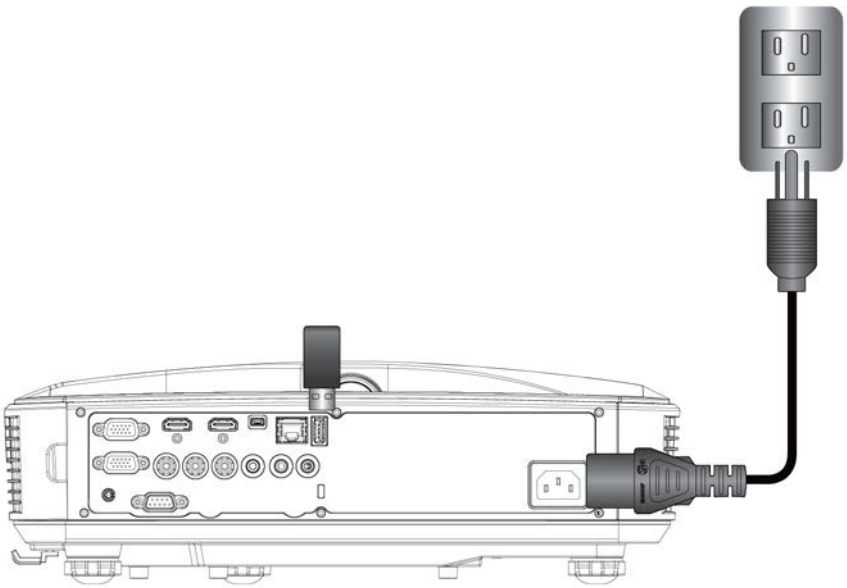

3. When the Input menu appears, press the up and down arrow keys to select **Multimedia** and the **Enter** key to confirm.

Mobile display

To access the media files stored on your mobile device or tablet PC, do the following:

1. On Multimedia menu, select **Mobile/Tablet**.

2. On your mobile device or tablet PC, download **EZview** application App Store (iOS) or Play Store (Android).
3. Enable your mobile device or tablet PC WiFi function, and search the AP name listed in the Wi-Fi network list.
4. On the initial connection, you will be prompted to enter a password. Enter the password.
5. Launch **EZview** application and enter the PCTOOL password.
6. Wait until the connection is established.

   The media files on your mobile device or tablet PC can be accessed using the projector.

Laptop display

To access the media files stored on your laptop/notebook, do the following:

1. On Multimedia menu, select **Laptop**.
2. Enable your laptop/notebook WiFi function, and search the AP name listed in the Wi-Fi network list.
3. On the initial connection, you will be prompted to enter a password. Enter the password.
4. Open your web browser and type the IP address.
5. Then select **Wifi** on the left side of the screen and install application required by the operation system.
6. Launch **EZview** application and enter the control code shown on the right- bottom side of the screen.
7. Wait until the connection is established.

   The media files on your laptop/notebook can be accessed using the projector.

Desktop display

To access the media files stored on your desktop, do the following:

1. On Multimedia menu, select **Desktop**.
2. Open your web browser and enter the IP address.
3. Then select **Wifi** on the left side of the screen and install application required by the operation system.
4. Launch **EZview** application and type the control code shown on the right-bottom side of the screen.
5. Wait until the connection is established.

   The media files on your desktop can be accessed using the projector.

USB storage display

To access the media files stored on your USB flash drive, do the following:

Supported file format	
Multimedia category	**File format**
Photo	BMP, JPG, PNG
Music	MP3, WMA
Video	AVI, MOV, MP4, RM, RMVB, DAT, MPG, ISO, TS, MKV, VOB, and WMV
Document	WORD, EXCEL, PPT, PDF

1. On Multimedia menu, select **USB Disk**.
2. Use the Up and Down arrows to select the file category and press the **Enter** key.
3. Use the Up and Down arrows to select the file to view/play and press the **Enter** key to confirm.

Configuring multimedia settings

To change the settings, do the following:

1. On Multimedia menu, select **Settings**.
2. Use the Up and Down arrows to select the desired menu option and press the **Enter** key to enter the submenu.
   - **System**—Select this option to view the firmware version and update firmware.
   - **Video**—Select this option to change the display ratio and set the repeat mode.
   - **Photo**—Select this option to change the display ratio, slideshow pattern, and slideshow duration.
   - **Music**—Select this option to set the repeat mode.
   - **WiFi**—Select this option to configure the Wi-Fi connection.
3. Use the Up and Down arrows to select the adjust/select the setting and press the **Enter** key to confirm.

Appendices

Installing and cleaning the optional dust filter

We recommend you clean the dust filter every 500 hours of operation, or more often if you are using the projector in a dusty environment.

When the warning message appears on the screen, do the following to clean the air filter:

```
The usage time of het dust filter is reached.

Please clean the dust filters for better performance.
```

- The optional dust filter should be used in dusty environments.
- If the dust filter is installed, a proper maintenance will prevent overheating and projector malfunction.
- The dust filter is optional.
- The specific interfaces are selected in terms of the specifications of types.

Air filter cleaning procedure

1. Power off the projector by pressing the button and unplug the power cord.
2. Pull out the dust filter, as shown in the illustration (1).
3. Carefully remove the dust filter. Then clean or change the filter in illustration (2).
4. To install the filter, reverse the previous steps.

5. Turn on the projector and reset the filter usage counter after the dust filter is replaced.

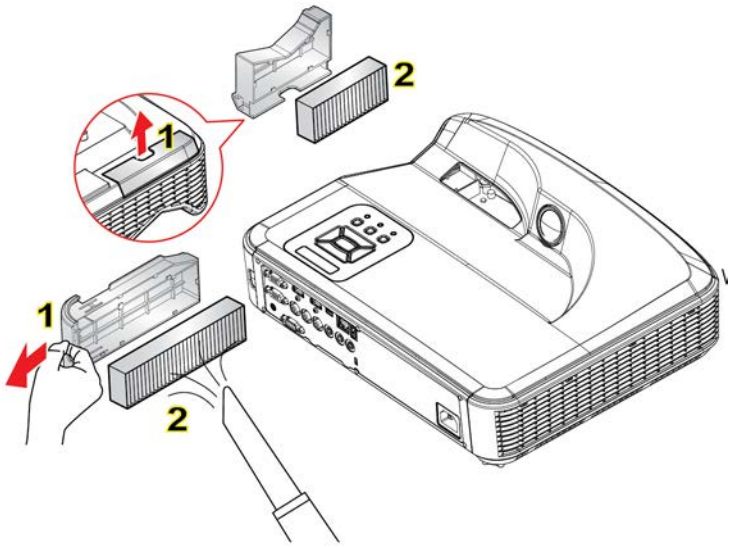

Compatibility modes

VGA Analog

a. PC signal			
Modes	**Resolution**	**V. Frequency [Hz]**	**H. Frequency [Hz]**
VGA	640x480	60	31.5
	640x480	67	35.0
	640x480	72	37.9
	640x480	75	37.5
	640x480	85	43.3
IBM	720x400	70	31.5
SVGA	800x600	56	35.1
	800x600	60	37.9
	800x600	72	48.1
	800x600	75	46.9
	800x600	85	53.7
Apple, MAC II	832x624	75	49.1
XGA	1024x768	60	48.4
	1024x768	70	56.5
	1024x768	75	60.0
	1024x768	85	68.7
	1024x768	120	99.0
Apple, MAC II	1152x870	75	68.7
SXGA	1280x1024	60	64.0
	1280x1024	72	77.0
	1280x1024	75	80.0
QuadVGA	1280x960	60	60.0
	1280x960	75	75.2
SXGA+	1400x1050	60	65.3
UXGA	1600x1200	60	75.0

b. Extended wide timing			
Modes	**Resolution**	**V. Frequency [Hz]**	**H. Frequency [Hz]**
WXGA	1280x720	60	44.8
	1280x800	60	49.6
	1366x768	60	47.7
	1440x900	60	59.9
WSXGA+	1680x1050	60	65.3
UWHD	1920x720	60	44.35
c. Component signal			
Modes	**Resolution**	**V. Frequency [Hz]**	**H. Frequency [Hz]**
480i	720x480 (1440x480)	59.94 (29.27)	15.7
576i	720x576 (1440x576)	50 (25)	15.6
480p	720x480	59.94	31.5
576p	720x576	50	31.3
720p	1280x720	60	45.0
	1280x720	50	37.5
1080i	1920x1080	60 (30)	33.8
	1920x1080	50 (25)	28.1
1080p	1920x1080	23.98/24	27.0
	1920x1080	60	67.5
	1920x1080	50	56.3

HDMI digital

a. PC signal			
Modes	**Resolution**	**V. Frequency [Hz]**	**H. Frequency [Hz]**
VGA	640x480	60	31.5
	640x480	67	35.0
	640x480	72	37.9
	640x480	75	37.5
	640x480	85	43.3
IBM	720x400	70	31.5
SVGA	800x600	56	35.1
	800x600	60	37.9
	800x600	72	48.1
	800x600	75	46.9
	800x600	85	53.7
Apple, MAC II	832x624	75	49.1
XGA	1024x768	60	48.4
	1024x768	70	56.5
	1024x768	75	60.0
	1024x768	85	68.7
	1024x768	120	99.0
Apple, MAC II	1152x870	75	68.7
SXGA	1280x1024	60	64.0
	1280x1024	72	77.0
	1280x1024	75	80.0
QuadVGA	1280x960	60	60.0
	1280x960	75	75.2
SXGA+	1400x1050	60	65.3
UXGA	1600x1200	60	75.0
b. Extended wide timing			
Modes	**Resolution**	**V. Frequency [Hz]**	**H. Frequency [Hz]**
WXGA	1280x720	60	44.8
	1280	60	49.6
	1366x768	60	47.7
	1440x900	60	59.9
WSXGA+	1680x1050	60	65.3

UWHD	1920x720	60	44.35
c. Video signal			
Modes	**Resolution**	**V. Frequency [Hz_**	**H. Frequency [Hz]**
480p	640x480	59.94/60	31.5
480i	720x480 (1440x480)	59.94	15.7
576i	720x576 (1440x576)	50 (25)	15.6
480p	720x480	59.94	31.5
576p	720x576	50	31.3
720p	1280x720	60	45.0
	1280x720	50	37.5
1080i	1920x1080	60 (30)	33.8
	1920x1080	50 (25)	28.1
1080p	1920x1080	23.98/24	27.0
	1920x1080	60	67.5
	1920x1080	50	56.3
d. HDMI 1.4a mandatory 3D timing–Video signal			
Modes	**Resolution**	**V. Frequency [Hz]**	**H. Frequency [Hz]**
Frame Packing	720p	50	31.5
	720p	59.94/60	15.7
	1080p	23.98/24	15.6
Side-by-Side (Half)	1080i	50	31.5
	1080i	59.94/60	31.3
Top and Bottom	720p	50	45.0
	720p	59.94/60	37.5
	1080p	23.98/24	33.8

RS232 commands and protocol function list

RS232 port setting

Items	Method
Communication Method	Asynchronous Communication
Bits per seconds	19200
Data bits	8 bits
Parity	None
Stop bits	1
Flow control	None

RS232 signals connection

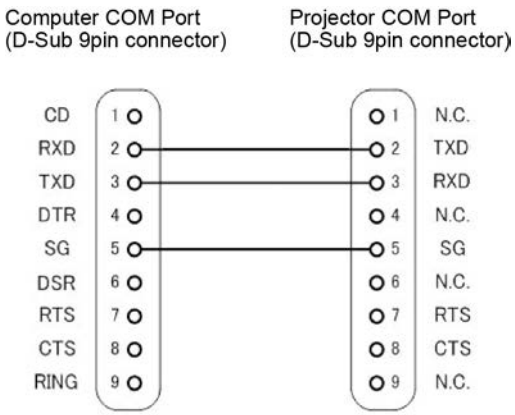

RS232 shell is grounded.

Commands set list

Command description	Command	Projector return	N value	Note
Power	(PWR n)	Pass: P Fail: F	0: Off 1: On	

Keypad	(KEY n)	Pass: P Fail: F	1: Up 2: Left 3: Right 4: Down 5: Menu 6: Source 7: Keystone+ 8: Keystone- 9: Volume+ 10: Volume-	
Resync	(RSC n)	Pass: P	1	VGA only
AV Mute (Blank)	(AVM n)	Pass: P Fail: F	0: Off 1: On	
Freeze	(FRZ n)	Pass: P Fail: F	0: Unfreeze 1: Freeze	
Input Source	(SIN n)	Pass: P Fail: F	1: VGA 1 2: VGA 2 3: HDMI 1 4: HDMI 2 5: Video 6: Multimedia	
Color Mode	(PST n)	Pass: P Fail: F	1: Bright 2: PC 3: Movie 4: Game 5: User	
Brightness	(BRT n)	Pass: P	Value: 0~100	
Contrast	(CON n)	Pass: P	Value: 0~100	
Sharpness	(SHA n)	Pass: P	Video only	
Aspect Ratio	(ASP n)	Pass: P Fail: F	1: Auto 2: 4:3 3: 16:9 4: 16:10	
Digital Zoom	(DZM n)	Pass: P Fail: F	0: Zoom- 1: Zoom+	
Keystone	(KST n)	Pass: P Fail: F	Value: -40 ~ 40	

Orientation	(SOR n)	Pass: P Fail: F	1: Front 2: Rear 3: Front Ceiling 4: Rear Ceiling	
Language	(LOC n)	Pass: P Fail: F	1: English 2: German 3: Swedish 4: French 5: Arabic 6: Dutch 7: Norwegian 8: Danish 9: Simplified Chinese 10: Polish 11: Korean 12: Russian 13: Spanish 14: Traditional Chinese 15: Italian 16: Portuguese 17: Turkish 18: Japanese	
Menu Location	(MSP n)	Pass: P Fail: F	1: Top Left 2: Top Right 3: Center 4: Bottom Left 5: Bottom Right	
Reset	(RST n)	Pass: P Fail: F		
Mute	(MUT n)	Pass: P Fail: F	0: Off 1: On	
Volume	(VOL n)	Pass: P Fail: F	Value: 0~30	
Microphone Volume	(MIC n)	Pass: P Fail: F	Value: 0~30	
Auto Power Off (min)	(ASH n)	Pass: P Fail: F	Step = 5 (0,5,10,15,20… 95,100,105,110,115, 120)	
High Altitude	(HAT n)	Pass: P Fail: F	0: Off 1: On	

Color Mode Read	(PST ?)	Pass: Okn Fail: F	n: 1 = Bright 2 = PC 3 = Movie 4 = Game 5 = User	
Aspect Ratio Read	(ASP ?)	Pass: Okn Fail: F	n: 1 = Auto 2 = 4:3 3 = 16:9 4 = 16:10	
Input Source (curr. src)	(SIN ?)	Pass: Okn Fail: F	n: 0 = None 1 = VGA1 2 = VGA2 3 = HDMI1 4 = HDMI2 5 = Video 6 = Multimedia	
Software Version	(VER ?)	Pass: Okddd Fail: F	ddd: FW version	
Status	(SST ?)	Pass: Okabbbbbccdddee Fail: F	a = Power Status b = LD Hour c = Input Source d = Firmware Version e = Color mode	

Optional accessories

- Wall mount - Silver + black (140-120104-XX)
- Wall Mount - Silver + white (140-120115-XX)
- IR Pen (140-121105-XX)
- Dust Filter (003-005584-XX)
- Captiva Touch (140-122106-XX)

Regulation and safety notices

This appendix lists the general notices of your projector.

FCC notice

This device has been tested and found to comply with the limits for a Class A digital device pursuant to Part 15 of the FCC rules. These limits are designed to provide reasonable protection against harmful interference in a residential installation. This device generates, uses and can radiate radio frequency energy and, if not installed and used in accordance with the instructions, may cause harmful interference to radio communications.

However, there is no guarantee that interference will not occur in a particular installation. If this device does cause harmful interference to radio or television reception, which can be determined by turning the device off and on, the user is encouraged to try to correct the interference by one or more of the following measures:

- Reorient or relocate the receiving antenna.
- Increase the separation between the device and receiver.
- Connect the device into an outlet on a circuit different from that to which the receiver is connected.
- Consult the dealer or an experienced radio/television technician for help.

Notice: Shielded cables

All connections to other computing devices must be made using shielded cables to maintain compliance with FCC regulations.

Caution

Changes or modifications not expressly approved by the manufacturer could void the user's authority, which is granted by the Federal Communications Commission, to operate this projector.

Operation conditions

This device complies with Part 15 of the FCC Rules. Operation is subject to the following two conditions:

1. This device may not cause harmful interference and
2. This device must accept any interference received, including interference that may cause undesired operation.

Notice: Canadian users

This Class A digital apparatus complies with Canadian ICES-003.

Remarque à l'intention des utilisateurs canadiens

Cet appareil numerique de la classe A est conforme a la norme NMB-003 du Canada.

Declaration of Conformity for EU countries

- EMC Directive 2004/108/EC (including amendments)

- Low Voltage Directive 2006/95/EC
- R & TTE Directive 1999/5/EC (if product has RF function)

Disposal instructions

Do not throw this electronic device into the trash when discarding. To minimize pollution and ensure utmost protection of the global environment, please recycle it.

Disposal instructions

Do not throw this electronic device into the trash when discarding. To minimize pollution and ensure utmost protection of the global environment, please recycle it.

Wall mount installation

Warning! Failure to comply with the following could result in death or serious injury.

- If you buy a wall mount from another company, be sure to use the correct screw size. Screw size will vary depending on the thickness of the mounting plate.
- Be sure to keep at least 10 cm gap between the wall and the bottom of the projector.
- Avoid installing the projector near a heat source.

Damage resulting from incorrect installation will void the warranty.

1. To prevent damage to your projector, please use wall mount (140-120104-XX/ 140-120115-XX).
2. If you want to use a third-party wall mount kit, ensure the screws used to attach a mount to the projector meet the following specifications:
    - Screw type: M4*4

- Minimum screw length: 10 mm

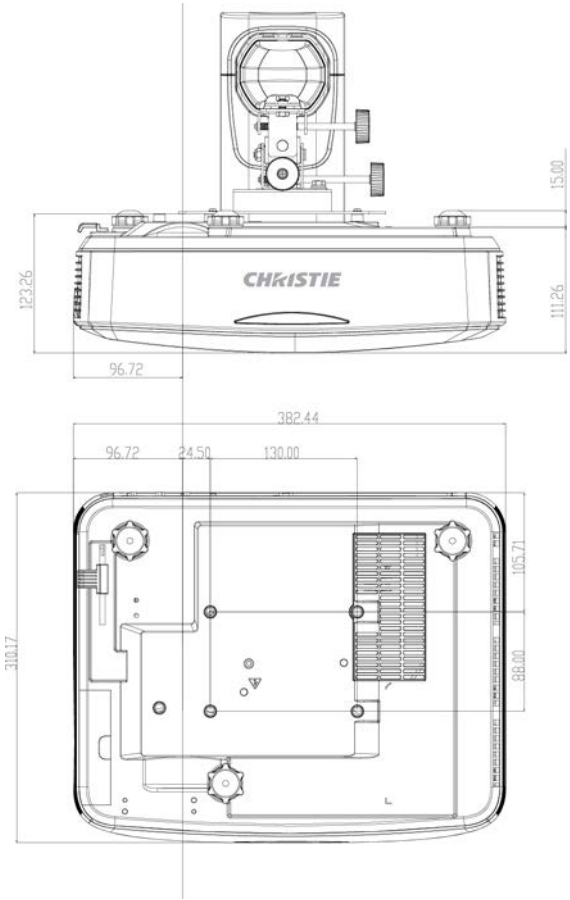

Corporate offices

Christie Digital Systems USA, Inc.
Cypress
ph: 714 236 8610

Christie Digital Systems Canada Inc.
Kitchener
ph: 519 744 8005

Worldwide offices

Australia
ph: +61 (0) 7 3624 4888

Brazil
ph: +55 (11) 2548 4753

China (Beijing)
ph: +86 10 6561 0240

China (Shanghai)
ph: +86 21 6278 7708

France
ph: +33 (0) 1 41 21 44 04

Germany
ph: +49 2161 664540

India
ph: +91 (080) 6708 9999

Japan (Tokyo)
ph: 81 3 3599 7481

Korea (Seoul)
ph: +82 2 702 1601

Mexico
ph: +52 55 4744 1790

Republic of South Africa
ph: +27 (0)11 510 0094

Russian Federation
and Eastern Europe
ph: +36 (0) 1 47 48 100

Singapore
ph: +65 6877 8737

Spain
ph: +34 91 633 9990

United Arab Emirates
ph: +971 4 3206688

United Kingdom
ph: +44 (0) 118 977 8000

United States (Arizona)
ph: 602 943 5700

United States (New York)
ph: 646 779 2014

Independant sales consultant offices

Italy
ph: +39 (0) 2 9902 1161

For the most current technical documentation, visit www.christiedigital.com.